Self-Propelled - Electric High Lift Scissor Truck *DGBZ* series

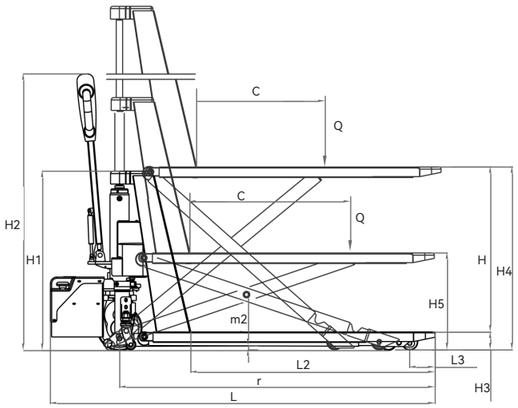

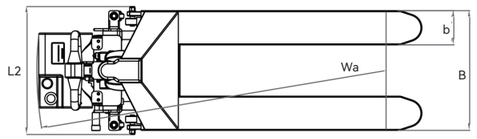

Model		DGBZ15C
Capacity	H≤450mm (kg)	1500
	H:0~800mm (kg)	1000
Min. Fork Height	H3 (mm)	85
Max. Fork Height	H4 (mm)	≥800
Lifting Time without Rated Load	(s)	≤25
Lifting Time with Rated Load	H≤450mm (s)	≤20
	H:0~800mm (s)	≤35
Descending Speed	(m/s)	≤0.1
Fork Size	L2×B (mm)	1140×560/680
Fork Foot Width	b (mm)	160
Performance of Steering Wheel		24V/750W
Steering Wheel Dia.	(mm)	Ø210×75
Overall Size	L×L2×H1 (mm)	1794×600×1293
Turning Radius	Wa (mm)	1635
Load Center	C (mm)	600
Travelling Speed	(km/h)	3
Turning Speed	(km/h)	2
Lifting Pump Station Motor		24V/800W
Travelling Motor		24V/750W
Lithium Battery	Weight (kg)	5.4
	Size (mm)	222×175×88
	Battery	24V/20Ah
Net Weight(without Battery)	(kg)	172

Manual Skid Lifter *SL / PL* series
Eletrci Skid Lifter *PE / PEL* series

Easier handling to minimize back strain.
Better feature - it can move when raised.

- Combination of pallet truck and lift table.
- Ideal for your loading and unloading operations.
- Continuous-welded heavy steel frame and forks handle weighty loads with ease.
- Easy-to-use control lever, plus two parking brakes on steering wheels increase safety.
- Reliable power unit for easier and faster lifting.
- Addtional steering handle on 1000kg models for easier and comfortable turning.
- Conforms to EN 1757-4 and EN 1175 (For Electric).

SL100S

PL100S

PE

PEL series with platform

Model		SL50S	SL50L	SL100S	SL100L	PL50S	PL50L	PL100S	PL100L	PE50S	PE50L	PE100S	PE100L	PEL50S	PEL50L	PEL100S	PEL100L
Type		Manual								Electric							
Platform		–				With platform				–				With platform			
Capacity	(kg)	500	500	1000	1000	500	500	1000	1000	500	500	1000	1000	500	500	1000	1000
Load Center	(mm)	560	560	560	560	560	560	560	560	560	560	560	560	560	560	560	560
Max. Fork Height	(mm)	830	830	830	830	833	833	833	833	830	830	830	830	833	833	833	833
Min. Fork Height	h (mm)	85	85	85	85	88	88	88	88	85	85	85	85	88	88	88	88
Fork/Platform Length	L (mm)	1115	1115	1115	1115	1115	1115	1115	1115	1115	1115	1115	1115	1115	1115	1115	1115
Fork/Platform Width	W (mm)	526	690	526	690	538	703	538	703	526	690	526	690	538	703	538	703
Overall Length	W1 (mm)	526	691	687	852	538	703	693	858	580	740	550	720	586	752	556	726
Overall Width	L1 (mm)	1550	1550	1640	1640	1550	1550	1640	1640	1620	1620	1740	1740	1620	1620	1740	1740
Overall Height	H1 (mm)	1012	1012	1307	1307	1012	1012	1307	1307	1050	1050	1307	1307	1050	1050	1307	1307
Steering Wheel	(mm)	Ø70×68 Polyurethane								Ø70×68 Polyurethane							
Front Roller	(mm)	Ø150×40 Polyurethane								Ø150×40 Polyurethane							
Pump Strokes to Max. Lift		45	45	75	75	45	45	75	75	–							
Power Unit	(KW)	–								1.6							
Battery	(V)	–								12							
Working Cycles	(s)	–								100	100	80	80	100	100	80	80
Net Weight	(kg)	107	116	135	138	122	136	150	158	172	176	174	180	180	184	182	188